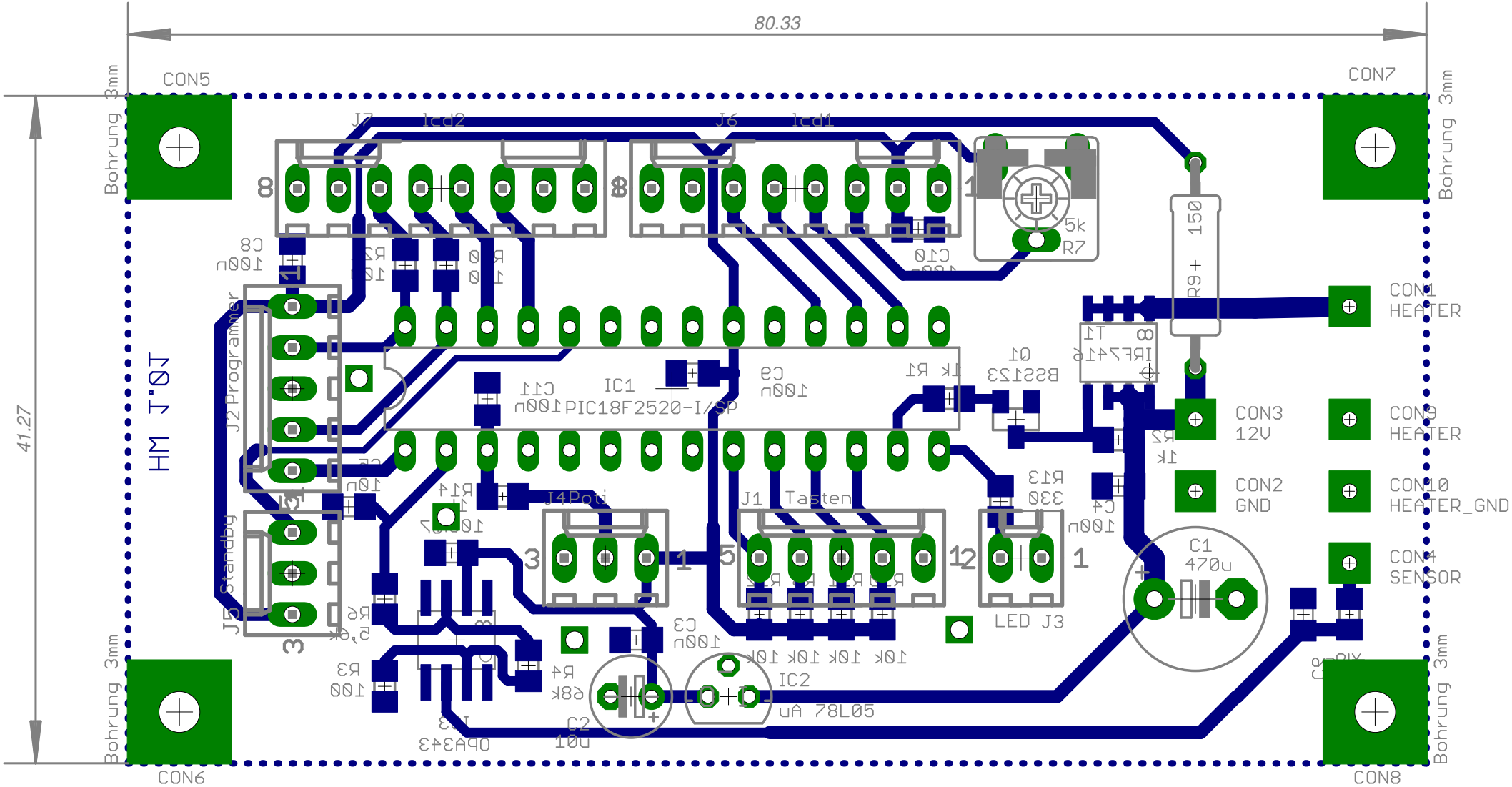

23.09.15 17:23 f=2.99 /opt/data/eagle/lindenau/SMD_Loetstation/board.brd