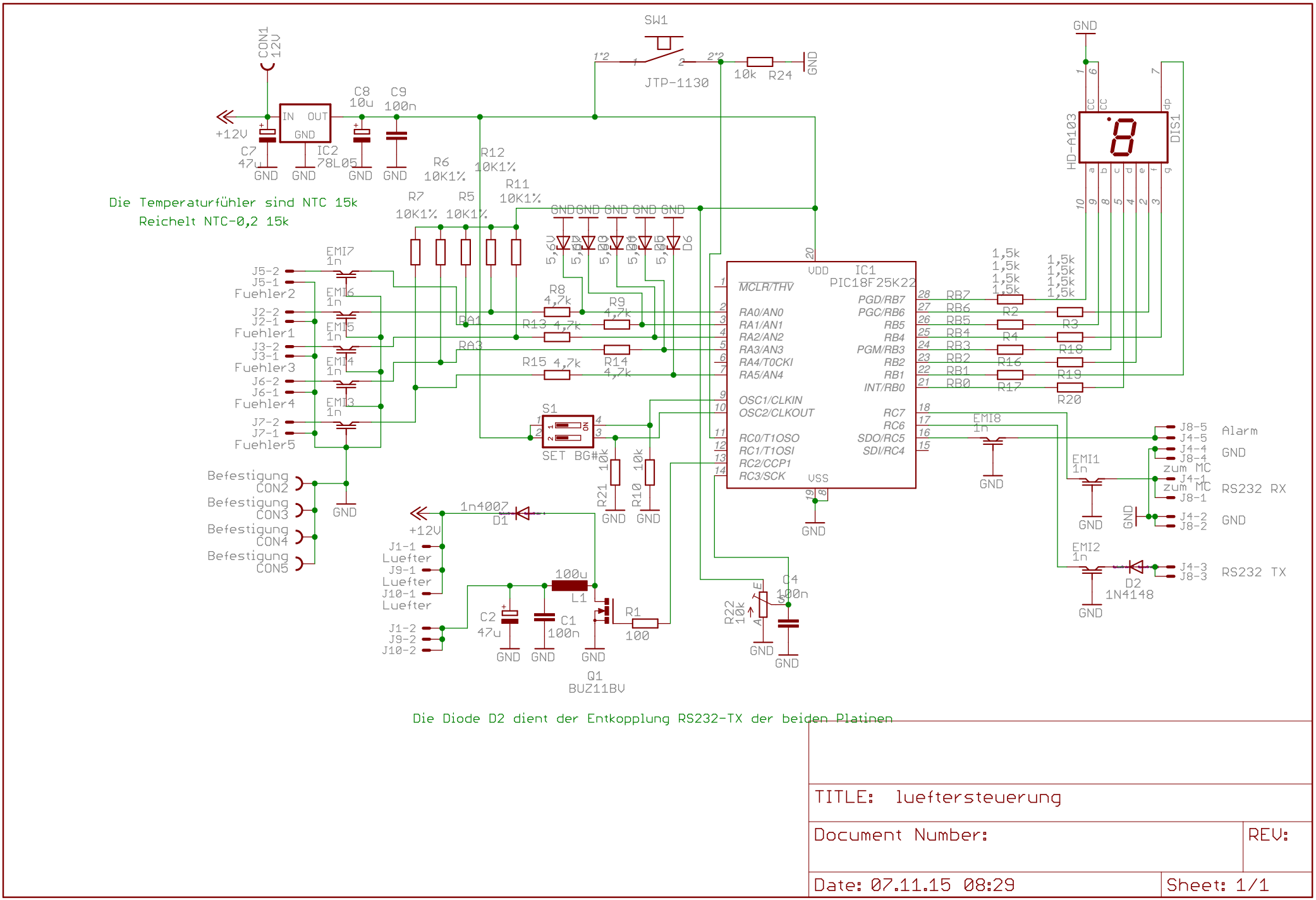

SW1
JTP-1130
CON1
12V
+12V
C7
47u
IC2
78L05
C8
10u
C9
100n
R6
10K1%
R12
10K1%
R11
10K1%
R7
10K1%
R5
10K1%
Die Temperaturfühler sind NTC 15k
Reichelt NTC-0,2 15k
EMI7
1n
EMI6
1n
EMI5
1n
EMI4
1n
EMI3
1n
J5-2
J5-1
Fuehler2
J2-2
J2-1
Fuehler1
J3-2
J3-1
Fuehler3
J6-2
J6-1
Fuehler4
J7-2
J7-1
Fuehler5
Befestigung
CON2
Befestigung
CON3
Befestigung
CON4
Befestigung
CON5
R8
4,7k
R9
4,7k
R13
4,7k
R15
4,7k
R14
4,7k
RA1
RA3
S1
SET BG#
R21
10k
R10
10k
1n4007
D1
J1-1
Luefter
J9-1
Luefter
J10-1
Luefter
J1-2
J9-2
J10-2
C2
47u
C1
100n
100u
L1
R1
100
Q1
BUZ11BV
IC1
PIC18F25K22
MCLR/THV
RA0/AN0
RA1/AN1
RA2/AN2
RA3/AN3
RA4/T0CKI
RA5/AN4
OSC1/CLKIN
OSC2/CLKOUT
RC0/T1OSO
RC1/T1OSI
RC2/CCP1
RC3/SCK
VDD
VSS
PGD/RB7
PGC/RB6
RB5
RB4
PGM/RB3
RB2
RB1
INT/RB0
RC7
RC6
SDO/RC5
SDI/RC4
R22
10k
C4
100n
HD-A103
DIS1
1,5k
R2
R3
R4
R16
R17
R18
R19
R20
EMI8
1n
EMI1
1n
EMI2
1n
D2
1N4148
J8-5
J4-5
Alarm
J4-4
J8-4
GND
zum MC
J4-1
J8-1
RS232 RX
J4-2
J8-2
J4-3
J8-3
RS232 TX
Die Diode D2 dient der Entkopplung RS232-TX der beiden Platinen
TITLE: lueftersteuerung
Document Number:
REV:
Date: 07.11.15 08:29
Sheet: 1/1